Aluminum Cased and Uncased Heat Pump / Cooling Coils 1 1/2 - 5 Ton

2/4TXA, 2/4TXC, 4TXC-CC

Heat Pump /Cooling Coils for R-22 and R-410A

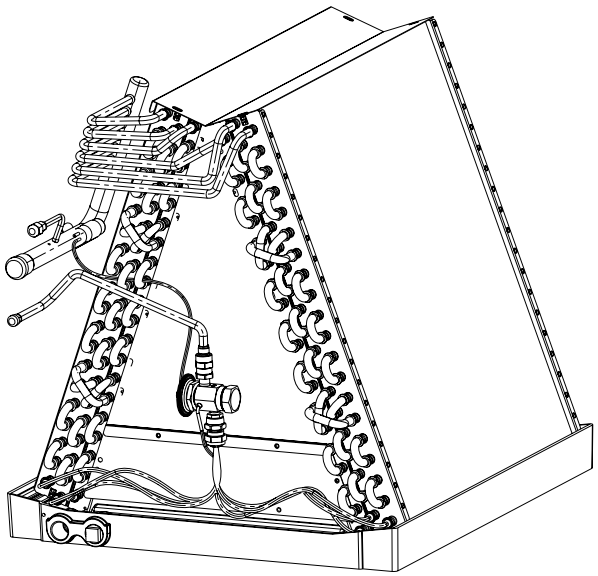

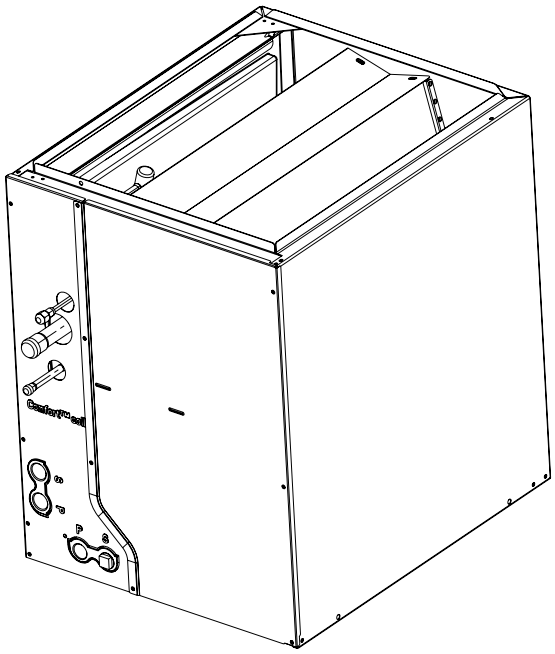

PUB. NO. 22-1813-03

Aluminum Heat Pump Coil Nomenclature

2 T X A B 0 3 6 B C 3 H U A A

Refrigerant Type
2 - R22
4 - R410A

Product Family
T-Premium (Heat Pump or Convertible Coil)

Coil Design
X - Direct Expansion Evaporator Coil

Product Family
C - Cased A Coil
A - Uncased A Coil
F - Cased Horizontal Flat Coil

Coil Width (Cased/Uncased)
A - 14.5" / 13.3"
B - 17.5" / 16.3"
C - 21.0" / 19.8"
D - 24.5" / 23.3"
H - 10.5"

Refrigerant Line Coupling
0 - Brazed

Nominal Capacity in 000's of BTU's

Major Design Change

Efficiency
C - Standard
S - Hi Efficiency

Refrigerant Control
3 - TXV - Non-Bleed

Coil Circuitry
H - Heat Pump

Airflow Configuration
A - Upflow Only
U - Upflow / Downflow
H - Horizontal Only
C - Convertible - Upflow, Downflow, Left or Right Airflow

Minor Design Change

Unit Parts Identifier

© 2008 Trane All rights reserved

High Efficiency /Staged System Aluminum Heat Pump/ Cooling Coil Nomenclature

4 T X C B 0 0 1 C C 3 H C A A

Refrigerant Type
4 - R410A

Product Family
T-Premium (Heat Pump or Convertible Coil)

Coil Design
X - Direct Expansion Evaporator Coil

Product Family
C - Cased A Coil
A - Uncased A Coil
F - Cased Horizontal Flat Coil

Coil Width (Cased/Uncased)
A - 14.5" / 13.3"
B - 17.5" / 16.3"
C - 21.0" / 19.8"
D - 24.5" / 23.3"
H - 10.5"

Refrigerant Line Coupling
0 - Brazed

Model Number Distinguisher

Major Design Change

Efficiency
C - Standard
S - Hi Efficiency (Derived from 10 SEER products)

Refrigerant Control
3 - TXV - Non-Bleed

Coil Circuitry
H - Heat Pump

Airflow Configuration
A - Upflow Only
U - Upflow / Downflow
H - Horizontal Only
C - Convertible - Upflow, Downflow, Left or Right Airflow

Minor Design Change

Unit Parts Identifier

Pub. No. 22-1813-03

Optional Accessories

13 SEER Coil Enclosures				
Model Number	Coil Cooling or Heat Pump		Used With Furnaces Flush on Both Sides	Dimensions (in.) H x W x D
BAYCLE14A1422A	2/4TXAA018BC3HUA 2/4TXAA024BC3HUA	TXA018C4 TXA024C4 TXA030C4	14-1/2" Wide Furnaces	22-1/2 x 14-1/2 x 21-1/2
BAYCLE17A1722A	2/4TXAB025BC3HUA 2/4TXAB031BC3HUA 4TXAB032BC3HUA 2/4TXAB036BC3HUA 2/4TXAB042BC3HUA 2/4TXAB048BC3HUA	TXA025C4 TXA031C4 TXA035C4 TXA036C4 TXA042C4 TXA048C4	17-1/2" Wide Furnaces	22-5/8 x 17-1/2 x 21-1/2
BAYCLE21A2130A	2/4TXAC037BC3HUA 2/4TXAC043BC3HUA 4TXAC044BC3HUA 2/4TXAC049BC3HUA 2/4TXAC060BC3HUA	TXA037C4 TXA043C4 TXA049C4 TXA060C5 RXA060S3	21" Wide Furnaces	30 x 21 x 21-1/2
BAYCLE24A2430A	2/4TXAD050BC3HUA 2/4TXAD061BC3HUA 2/4TXAD064BC3HUA	TXA061C5 RXA061S3	24-1/2" Wide Furnaces	30 x 24-1/2 x 21-1/2

General Data

NON-BLEED TXV KITS		
Coils	**R410A**	**R22**
2/4TXC,TXA - 018	4AYTXVH3**D**1831A	2AYTXVH3**C**1818A
2/4TXC,TXA - 024	4AYTXVH3**D**1831A	2AYTXVH3**C**2425A
2/4TXC,TXA - 025	4AYTXVH3**D**1831A	2AYTXVH3**C**2425A
2/4TXC,TXA - 030	4AYTXVH3**D**1831A	2AYTXVH3**C**3031A
2/4TXC,TXA - 031	4AYTXVH3**D**1831A	2AYTXVH3**C**3031A
4TXC,TXA - 032	4AYTXVH3**D**3343A	2AYTXVH3**C**3337A
2/4TXC,TXA - 036	4AYTXVH3**D**3343A	2AYTXVH3**C**3337A
2/4TXC,TXA - 037	4AYTXVH3**D**3343A	2AYTXVH3**C**3337A
2/4TXC,TXA - 042	4AYTXVH3**D**3343A	2AYTXVH3**C**4243A
2/4TXC,TXA - 043	4AYTXVH3**D**3343A	2AYTXVH3**C**4243A
4TXC,TXA - 044	4AYTXVH3**D**4863A	2AYTXVH3**C**4850A
2/4TXC,TXA - 048	4AYTXVH3**D**4863A	2AYTXVH3**C**4850A
2/4TXC,TXA - 049	4AYTXVH3**D**4863A	2AYTXVH3**C**4850A
2/4TXC,TXA - 050	4AYTXVH3**D**4863A	2AYTXVH3**C**4850A
2/4TXC,TXA - 060	4AYTXVH3**D**4863A	2AYTXVH3**C**5463A
2/4TXC,TXA - 061	4AYTXVH3**D**4863A	2AYTXVH3**C**5463A
2/4TXC,TXA - 064	4AYTXVH3**D**4863A	2AYTXVH3**C**5463A

General Data

PRODUCT SPECIFICATIONS[1] 2/4 TXA-BC UNCASED UPFLOW / DOWNFLOW

	2/4TXAA018BC3HUA		2/4TXAA024BC3HUA		2/4TXAB025BC3HUA		2/4TXAB031BC3HUA		4TXAB032BC3HUA	
INDOOR COIL--Type	PLATE FIN		PLATE FIN		PLATE FIN		PLATE FIN		PLATE FIN	
Rows / F.P.I.	2 / 18		2 / 18		3 / 14		3 / 14		3 / 14	
Face Area (sq.ft.)	4.00		4.00		3.50		3.50		5.00	
Tube Size (in.)	3/8		3/8		3/8		3/8		3/8	
Refrigerant Control (No internal check valve)	Non-Bleed TXV		Non-Bleed TXV		Non-Bleed TXV		Non-Bleed TXV		Non-Bleed TXV	
Drain Conn. Size (in.)	3/4 NPT		3/4 NPT		3/4 NPT		3/4 NPT		3/4 NPT	
Duct Connections					-See Outline Drawings-					
REFRIGERANT CONNECTIONS	R-22 BRAZED	R-410A BRAZED	R-22 BRAZED	R-410A BRAZED	R-22 BRAZED	R-410A BRAZED	R-22 BRAZED	R-410A BRAZED	R-22 BRAZED	R-410A BRAZED
Line Size (Gas) (in.	3/4	5/8*	3/4	5/8*	3/4	5/8*	3/4	3/4	7/8	3/4*
Line Size (Liquid) (in.)	5/16	5/16	5/16	5/16	5/16	5/16	3/8	3/8	3/8	3/8
DIMENSIONS (In.)	**H x W x D**		**H x W x D**		**H X W X D**		**H X W X D**		**H X W X D**	
Crated (H x W x D)	18-1/2x17-1/2x26-1/2		18-1/2x17-1/2x26-1/2		16-1/2x20-1/2x 26-1/2		16-1/2x20-1/2 x26-1/2		22-3/4x20-1/2x26-1/2	
Uncrated (H x W x D)					-See Outline Drawings-					
WEIGHT (lbs.)										
Shipping -- Net	21 / 19		21 / 19		24 / 22		24 / 22		32 / 29	

	2/4TXAB036BC3HUA		2/4TXAC037BC3HUA		2/4TXAB042BC3HUA		2/4TXAC043BC3HUA		4TXAC044BC3HUA	
INDOOR COIL -- Type	PLATE FIN		PLATE FIN		PLATE FIN		PLATE FIN		PLATE FIN	
Rows / F.P.I.	3 / 14		3 / 14		3 / 14		3 / 14		3 / 14	
Face Area (sq.ft.)	5.00		5.00		5.00		5.00		6.00	
Tube Size	3/8		3/8		3/8		3/8		3/8	
Refrigerant Control (No internal check valve)	Non-Bleed TXV		Non-Bleed TXV		Non-Bleed TXV		Non-Bleed TXV		Non-Bleed TXV	
Drain Conn. Size (in.)	3/4 NPT		3/4 NPT		3/4 NPT		3/4 NPT		3/4 NPT	
Duct Connections					-See Outline Drawings-					
REFRIGERANT CONNECTIONS	R-22 BRAZED	R-410A BRAZED	R-22 BRAZED	R-410A BRAZED	R-22 BRAZED	R-410A BRAZED	R-22 BRAZED	R-410A BRAZED	R-22 BRAZED	R-410A BRAZED
Line Size -- Gas (in.)	7/8	3/4*	7/8	3/4*	7/8	3/4*	7/8	3/4*	1-1/8	7/8*
Line Size -- Liquid (in.)	3/8	3/8	3/8	3/8	3/8	3/8	3/8	3/8	3/8	3/8
DIMENSIONS (in.)	**H X W X D**		**H X W X D**		**H X W X D**		**H X W X D**		**H X W X D**	
Crated (H x W x D)	22-3/4x20-1/2x26-1/2		22-3/4x24x26-1/2		22-3/4x 24 x 26-1/2		22-3/4x 24 x 26-1/2		28-1/4x24x26-1/2	
Uncrated					-See Outline Drawings-					
WEIGHT (lbs)										
Shipping -- Net	32 / 29		33 / 30		32 / 29		33 / 30		38 / 34	

	2/4TXAB048BC3HUA		2/4TXAC049BC3HUA		2/4TXAC060BC3HUA		2/4TXAD050BC3HUA		2/4TXAD061BC3HUA		2/4TXAD064BC3HUA	
INDOOR COIL -- Type	PLATE FIN		PLATE FIN		PLATE FIN		PLATE FIN		PLATE FIN		PLATE FIN	
Rows / F.P.I.	3 / 14		3 / 14		3 / 14		3 / 14		3 / 14		3 / 18	
Face Area (sq.ft.)	6.00		6.00		7.00		6.00		7.00		7.00	
Tube Size	3/8		3/8		3/8		3/8		3/8		3/8	
Refrigerant Control (No internal check valve)	Non-Bleed TXV		Non-Bleed TXV		Non-Bleed TXV		Non-Bleed TXV		Non-Bleed TXV		Non-Bleed TXV	
Drain Conn. Size (in.)	3/4 NPT		3/4 NPT		3/4 NPT		3/4 NPT		3/4 NPT		3/4 NPT	
Duct Connections					-See Outline Drawings-							
REFRIGERANT CONNECTIONS	R-22 BRAZED	R-410A BRAZED	R-22 BRAZED	R-410A BRAZED	R-22 BRAZED	R-410A BRAZED	R-22 BRAZED	R-410A BRAZED	R-22 BRAZED	R-410A BRAZED	R-22 BRAZED	R-410A BRAZED
Line Size -- Gas (in.)	1-1/8	7/8*	1-1/8	7/8*	7/8	7/8*	7/8	7/8*	7/8	7/8*	7/8	7/8*
Line Size -- Liquid (in.)	3/8	3/8	3/8	3/8	3/8	3/8	3/8	3/8	3/8	3/8	3/8	3/8
DIMENSIONS (in.)	**H X W X D**		**H X W X D**		**H X W X D**		**H X W X D**		**H X W X D**		**H X W X D**	
Crated (H x W x D)	28-1/4x20-1/2x26-1/2		28-1/4x24x26-1/2		31-1/2x27-1/2x26-1/2		28-1/4x27-1/2x26-1/2		31-1/2x27-1/2x26-1/2		31-1/2x27-1/2x26-1/2	
Uncrated					-See Outline Drawings-							
WEIGHT (lbs)												
Shipping -- Net	36 / 33		38 / 34		44 / 40		39 / 35		45 / 41		45 / 41	

* Reducer supplied with R-410A models

[1] These indoor coils are A.H.R.I. certified with various split system air conditioners and heat pumps (A.H.R.I. Standard 210/240). Refer to the Split System Outdoor product information site or www.ahrinet.org

General Data

PRODUCT SPECIFICATIONS[1] – 2/4 TXC-BC - SPLIT SYSTEM HEAT PUMP / COOLING COMFORT™ COILS CASED UPFLOW / DOWNFLOW / HORIZONTAL

	2/4TXCA018BC3HCA		2/4TXCA024BC3HCA		2/4TXCB025BC3HCA		2/4TXCB031BC3HCA		4TXCB032BC3HCA	
INDOOR COIL -- Type	PLATE FIN		PLATE FIN		PLATE FIN		PLATE FIN		PLATE FIN	
Rows / F.P.I.	2 / 18		2 / 18		3 / 14		3 / 14		3 / 14	
Face Area (sq.ft.)	3.50		4.00		3.50		3.50		5.00	
Tube Size	3/8		3/8		3/8		3/8		3/8	
Refrigerant Control (No internal check valve)	Non-Bleed TXV		Non-Bleed TXV		Non-Bleed TXV		Non-Bleed TXV		Non-Bleed TXV	
Drain Conn. Size (in.)	3/4 NPT		3/4 NPT		3/4 NPT		3/4 NPT		3/4 NPT	
Duct Connections					-See Outline Drawings-					
REFRIGERANT CONNECTIONS	R-22 BRAZED	R-410A BRAZED	R-22 BRAZED	R-410A BRAZED	R-22 BRAZED	R-410A BRAZED	R-22 BRAZED	R-410A BRAZED	R-22 BRAZED	R-410A BRAZED
Line Size -- Gas (in.)	5/8	1/2*	3/4	5/8*	3/4	5/8*	3/4	3/4	7/8	3/4*
Line Size -- Liquid (in.)	1/4	1/4	5/16	5/16	5/16	5/16	5/16	5/16	3/8	3/8
DIMENSIONS (in.)	**H X W X D**		**H X W X D**		**H X W X D**		**H X W X D**		**H X W X D**	
Crated (H x W x D)	15-1/2x17-1/2x26-1/2		18-1/2x17-1/2x26-1/2		16-1/2x20-1/2x26-1/2		16-1/2x20-1/2x26-1/2		22-3/4x20-1/2x26-1/2	
Uncrated					-See Outline Drawings-					
WEIGHT (lbs)										
Shipping -- Net	36 / 34		36 / 34		40 / 38		40 / 38		48 / 45	

	2/4TXCB036BC3HCA		2/4TXCC037BC3HCA		2/4TXCB042BC3HCA		2/4TXCC043BC3HCA		4TXCC044BC3HCA	
INDOOR COIL -- Type	PLATE FIN		PLATE FIN		PLATE FIN		PLATE FIN		PLATE FIN	
Rows / F.P.I.	3 / 14		3 / 14		3 / 14		3 / 14		3 / 14	
Face Area (sq.ft.)	5.00		5.00		5.00		5.00		6.00	
Tube Size	3/8		3/8		3/8		3/8		3/8	
Refrigerant Control (No internal check valve)	Non-Bleed TXV		Non-Bleed TXV		Non-Bleed TXV		Non-Bleed TXV		Non-Bleed TXV	
Drain Conn. Size (in.)	3/4 NPT		3/4 NPT		3/4 NPT		3/4 NPT		3/4 NPT	
Duct Connections					-See Outline Drawings-					
REFRIGERANT CONNECTIONS	R-22 BRAZED	R-410A BRAZED	R-22 BRAZED	R-410A BRAZED	R-22 BRAZED	R-410A BRAZED	R-22 BRAZED	R-410A BRAZED	R-22 BRAZED	R-410A BRAZED
Line Size -- Gas (in.)	7/8	3/4*	7/8	3/4*	7/8	3/4*	7/8	3/4*	1-1/8	7/8*
Line Size -- Liquid (in.)	3/8	3/8	3/8	3/8	3/8	3/8	3/8	3/8	3/8	3/8
DIMENSIONS (in.)			**H X W X D**		**H X W X D**		**H X W X D**		**H X W X D**	
Crated (H x W x D)	22-3/4x20-1/2x26-1/2		22-3/4x24x26-1/2		22-3/4x20-1/2x26-1/2		22-3/4x24x26-1/2		28-1/4x24x26-1/2	
Uncrated					-See Outline Drawings-					
WEIGHT (lbs)										
Shipping -- Net	48 / 45		51 / 48		48 / 45		51 / 48		55 / 51	

	2/4TXCB048BC3HCA		2/4TXCC049BC3HCA		2/4TXCD050BC3HCA		2/4TXCC060BC3HCA		2/4TXCD061BC3HCA		2/4TXCD064BC3HCA	
INDOOR COIL -- Type	PLATE FIN		PLATE FIN		PLATE FIN		PLATE FIN		PLATE FIN		PLATE FIN	
Rows / F.P.I.	3 / 14		3 / 14		3 / 14		3 / 14		3 / 14		3 / 18	
Face Area (sq.ft.)	6.00		6.00		6.00		7.00		7.00		7.00	
Tube Size	3/8		3/8		3/8		3/8		3/8		3/8	
Refrigerant Control (No internal check valve)	Non-Bleed TXV		Non-Bleed TXV		Non-Bleed TXV		Non-Bleed TXV		Non-Bleed TXV		Non-Bleed TXV	
Drain Conn. Size (in.)	3/4 NPT		3/4 NPT		3/4 NPT		3/4 NPT		3/4 NPT		3/4 NPT	
Duct Connections					-See Outline Drawings-							
REFRIGERANT CONNECTIONS	R-22 BRAZED	R-410A BRAZED	R-22 BRAZED	R-410A BRAZED	R-22 BRAZED	R-410A BRAZED	R-22 BRAZED	R-410A BRAZED	R-22 BRAZED	R-410A BRAZED	R-22 BRAZED	R-410A BRAZED
Line Size -- Gas (in.)	1-1/8	7/8*	1-1/8	7/8*	1-1/8	7/8*	1-1/8	7/8*	1-1/8	7/8*	1-1/8	7/8*
Line Size -- Liquid (in.)	3/8	3/8	3/8	3/8	3/8	3/8	3/8	3/8	3/8	3/8	3/8	3/8
DIMENSIONS (in.)	**H X W X D**		**H X W X D**		**H X W X D**		**H X W X D**		**H X W X D**		**H X W X D**	
Crated (H x W x D)	28-1/4x20-1/2x26-1/2		28-1/4x24x26-1/2		28-1/4x27-1/2x26-1/2		31-1/2x24x26-1/2		31-1/2x27-1/2x26-1/2		31-1/2x27-1/2x26-1/2	
Uncrated					-See Outline Drawings-							
WEIGHT (lbs)												
Shipping -- Net	51 / 49		55 / 51		59 / 55		69 / 65		72 / 68		72 / 68	

* Reducer supplied with R-410A models

[1] These indoor coils are A.H.R.I. certified with various split system air conditioners and heat pumps (A.H.R.I. Standard 210/240). Refer to the Split System Outdoor product information site or www.ahrinet.org

General Data

PRODUCT SPECIFICATIONS[1] -- 4TXC-CC - HIGH EFFICIENCY STAGED SPLIT SYSTEM HEAT PUMP / COOLING COMFORT™ COILS CASED UPFLOW / DOWNFLOW / HORIZONTAL

	4TXCB003CC3HCA	4TXCB004CC3HCA	4TXCC006CC3HCA	4TXCC007CC3HCA
INDOOR COIL -- Type	PLATE FIN	PLATE FIN	PLATE FIN	PLATE FIN
Rows / F.P.I.	3 / 18	3 / 18	3 / 18	3 / 18
Face Area (sq.ft.)	5.00	6.00	5.00	6.00
Tube Size	3/8	3/8	3/8	3/8
Refrigerant Control (No internal check valve)	Non-Bleed TXV	Non-Bleed TXV	Non-Bleed TXV	Non-Bleed TXV
Drain Conn. Size (in.)	3/4 NPT	3/4 NPT	3/4 NPT	3/4 NPT
Duct Connections		-See Outline Drawings-		
REFRIGERANT CONNECTIONS	R-410A BRAZED	R-410A BRAZED	R-410A BRAZED	R-410A BRAZED
Line Size -- Gas (in.)*	5/8	3/4	5/8	3/4
Line Size -- Liquid (in.)	3/8	3/8	3/8	3/8
DIMENSIONS (in.)	**H X W X D**	**H X W X D**	**H X W X D**	**H X W X D**
Crated (H x W x D)	22-3/4 x 20-1/2 x 26-1/2	28-1/4 x 20-1/2 x 26-1/2	22-3/4 x 24 x 26-1/2	28-1/4 x 24 x 26-1/2
Uncrated		-See Outline Drawings-		
WEIGHT (lbs)				
Shipping -- Net	48 / 45	52 / 49	51 / 48	55 / 51

	4TXCC008CC3HCA	4TXCD010CC3HCA
INDOOR COIL -- Type	PLATE FIN	PLATE FIN
Rows / F.P.I.	3 / 14	3 / 18
Face Area (sq.ft.)	7.00	7.00
Tube Size	3/8	3/8
Refrigerant Control (No internal check valve)	Non-Bleed TXV	Non-Bleed TXV
Drain Conn. Size (in.)	3/4 NPT	3/4 NPT
Duct Connections	-See Outline Drawings-	
REFRIGERANT CONNECTIONS	R-410A BRAZED	R-410A BRAZED
Line Size -- Gas (in.)	3/4	3/4
Line Size -- Liquid (in.)	3/8	3/8
DIMENSIONS (in.)	**H X W X D**	**H X W X D**
Crated (H x W x D)	31-1/2 x 24 x 26-1/2	31-1/2 x 27-1/2 x 26-1/2
Uncrated	-See Outline Drawings-	
WEIGHT (lbs)		
Shipping -- Net	69 / 65	72 / 68

[1] These indoor coils are A.H.R.I. certified with various split system air conditioners and heat pumps (A.H.R.I. Standard 210/240). Refer to the Split System Outdoor product information site or www.ahrinet.org

Performance Data

PRESSURE DROP CHARACTERISTICS FOR COOLING AND HEAT PUMP COILS AIRFLOW (CFM) VS. PRESSURE DROP ACROSS WET COIL								
PRESSURE DROP (INCHES OF WATER COLUMN)								
MODEL	.05	0.1	0.15	0.2	0.25	0.3	0.35	0.4
2/4TXAA018BC3HUA 2/4TXCA018BC3HCA	360	545	690	820	930	1040	1135	1230
2/4TXAA024BC3HUA 2/4TXCA024BC3HCA	360	545	690	820	930	1040	1135	1230
2/4TXAB025BC3HUA 2/4TXAB031BC3HUA 2/4TXCB025BC3HCA 2/4TXCB031BC3HCA	310	515	700	865	1020	1170	1310	1450
4TXAB032BC3HUA 2/4TXAB036BC3HUA 2/4TXAB042BC3HUA 4TXCB032BC3HCA 2/4TXCB036BC3HCA 2/4TXCB042BC3HCA	480	690	860	1005	1130	1250	1360	1460
2/4TXAB048BC3HUA 2/4TXCB048BC3HCA	470	680	840	980	1110	1220	1330	1425
2/4TXAC037BC3HUA 2/4TXAC043BC3HUA 2/4TXCC037BC3HCA 2/4TXCC043BC3HCA	630	900	1105	1280	1440	1520	1710	1830
4TXAC044BC3HUA 2/4TXAC049BC3HUA 4TXCC044BC3HCA 2/4TXCC049BC3HCA	675	970	1200	1390	1560	1715	1860	2000
2/4TXAC060BC3HUA 2/4TXCC060BC3HCA 4TXCC008CC3HCA	680	965	1190	1375	1540	1685	1820	1950
2/4TXAD050BC3HUA 2/4TXCD050BC3HCA	810	1140	1390	1600	1790	1950	2110	2250
2/4TXAD061BC3HUA 2/4TXCD061BC3HCA	820	1155	1410	1620	1810	1980	2130	2280
2/4TXAD064BC3HUA 2/4TXCD064BC3HCA 4TXCD010CC3HCA	670	1000	1250	1470	1670	1850	2020	2180
4TXCB003CC3HCA	510	715	875	1005	1125	1230	1325	1415
4TXCB004CC3HCA	465	685	865	1015	1155	1280	1395	1505
4TXCC006CC3HCA	460	715	930	1115	1290	1450	1600	1740
4TXCC007CC3HCA	550	820	1030	1210	1375	1525	1665	1795

Outline Drawing for 2/4TXAA018BC3HUA, 2/4TXAC024BC3HUA, 2/4TXAB025BC3HUA, 2/4TXAB031BC3HUA 4TXAB032BC3HUA, 2/4TXAB036BC3HUA, 2/4TXAB042BC3HUA, 2/4TXAB048BC3HUA, 2/4TXAC037BC3HUA, 2/4TXAC043BC3HUA, 4TXAC044BC3HUA, 2/4TXAC049BC3HUA, 2/4TXAC060BC3HUA, 2/4TXAD050BC3HUA, 2/4TXAD061BC3HUA, 2/4TXAD064BC3HUA

(All dimensions are in inches)

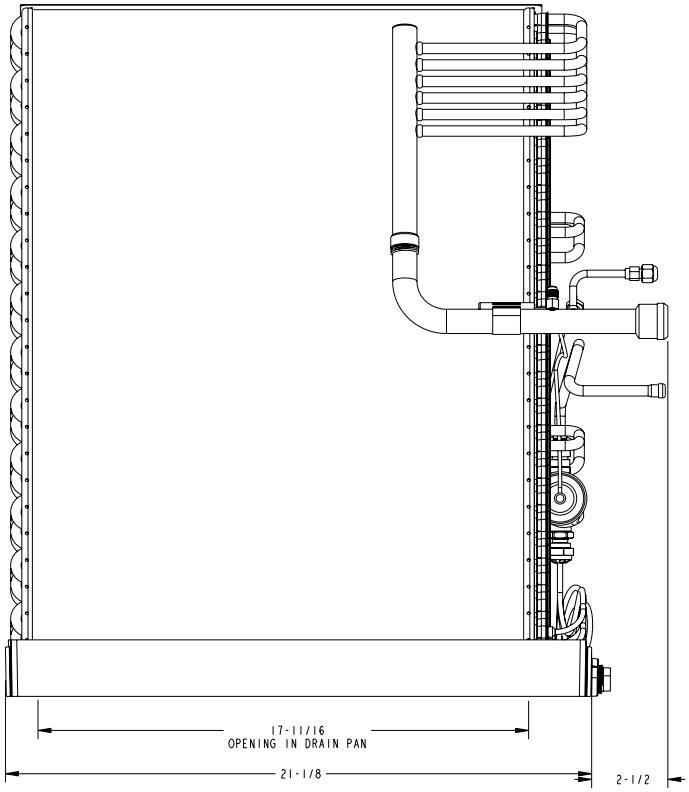

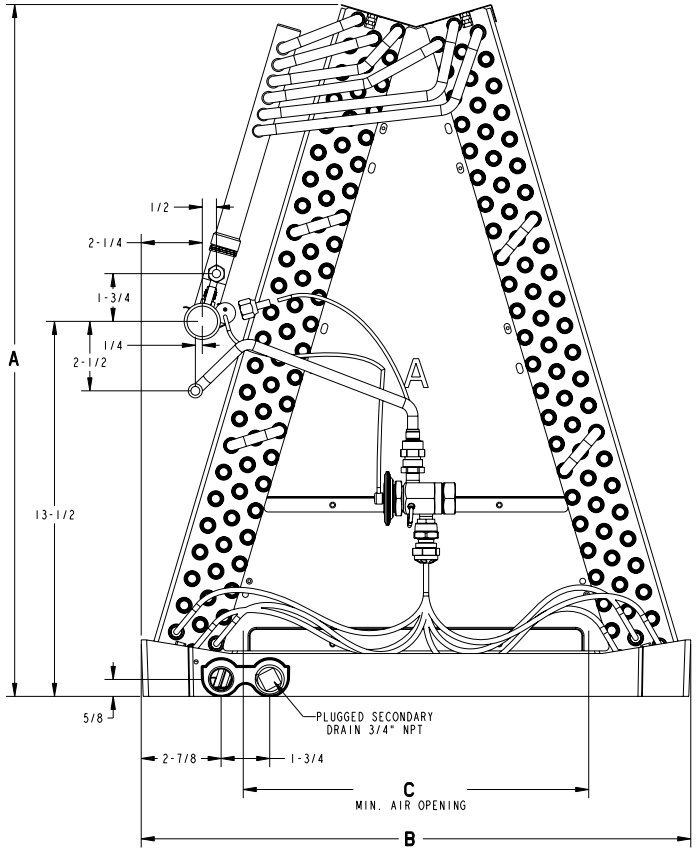

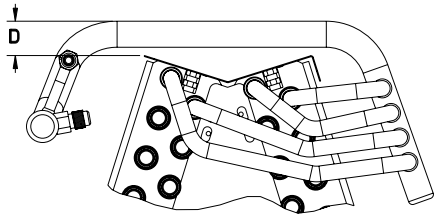

025, 031 ONLY

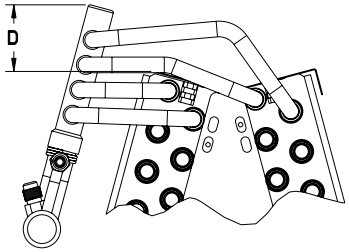

018, 024 ONLY

REDUCER SUPPLIED
WITH R-410A MODELS

MODEL	2TXAA018BC3HUA 4TXAA018BC3HUA 2TXAA024BC3HUA 4TXAA024BC3HUA	2TXAB025BC3HUA 4TXAB025BC3HUA 2TXAB031BC3HUA 4TXAB031BC3HUA	4TXAB032BC3HUA 2TXAB036BC3HUA 4TXAB036BC3HUA 2TXAB042BC3HUA 4TXAB042BC3HUA	2TXAB037BC3HUA 4TXAB037BC3HUA 2TXAC043BC3HUA 4TXAC043BC3HUA	2TXAB048BC3HUA 4TXAB048BC3HUA	4TXAC044BC3HUA 2TXAC049BC3HUA 4TXAC049BC3HUA	2TXAD050BC3HUA 4TXAD050BC3HUA	2TXAC060BC3HUA 4TXAC060BC3HUA	2TXAD061BC3HUA 2TXAD064BC3HUA 4TXAD061BC3HUA 4TXAD064BC3HUA
WEIGHT (LBS.)	19	22	29	30	33	34	35	40	41
REFRIGERANT CONTROL	TXV (NON-BLEED)								
HEIGHT "A" (IN.)	17-3/8	15	21-1/4	20-3/4	25-5/16	24-15/16	24-3/8	29-1/8	28-9/16
OVERALL WIDTH "B" (IN.)	13-1/4	16-1/4		19-3/4	16-1/4	19-3/4	23-1/4	19-3/4	23-1/4
OPENING WIDTH "C" (IN.)	7-3/4	9		12-1/2	9	12-1/2	16	12-1/2	16
"D"	1-5/8	1	- -	- -	- -	- -	- -	- -	- -
GAS CONNECTION	3/4 BRAZE		7/8 BRAZE		1-1/8 BRAZE				
R410-A GAS REDUCER	5/8" X 3/4"	5/8" X 3/4" (025 ONLY)	3/4" X 7/8"		7/8" X 1-1/8"				
LIQUID CONNECTION	5/16 BRAZE		3/8 BRAZE						
DRAIN PAN	PLASTIC								

From Dwg.D343005 Rev. 1

Outline Drawing for 2/4TXCA018BC3HCA, 2/4TXCA024BC3HCA, 2/4TXCB025BC3HCA, 2/4TXC031BC3HCA, 4TXCB032BC3HCA, 2/4TXCB036BC3HCA, 2/4TXCC037BC3HCA, 2/4TXCB042BC3HCA, 2/4TXCC043BC3HCA, 4TXCC044BC3HCA, 2/4TXCB048BC3HCA, 2/4TXCC049BC3HCA, 2/4TXCC060BC3HCA

(All dimensions are in inches)

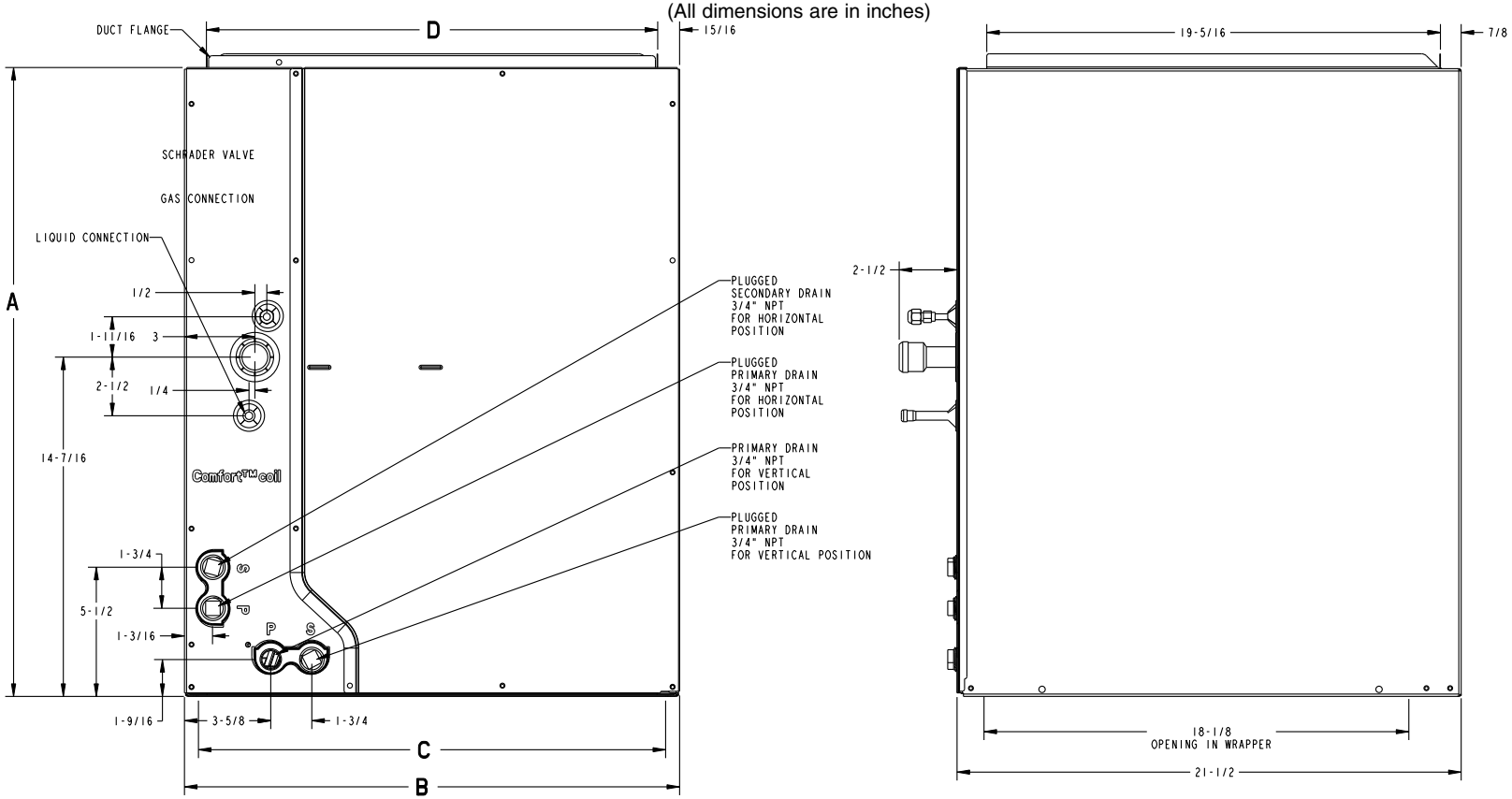

MODEL	2TXCA018BC3HCA 4TXCA018BC3HCA 2TXCA024BC3HCA 4TXCA024BC3HCA	2TXCB025BC3HCA 4TXCB025BC3HCA 2TXCB031BC3HCA 4TXCB031BC3HCA	4TXCB032BC3HCA 2TXCB036BC3HCA 4TXCB036BC3HCA 2TXCB042BC3HCA 4TXCB042BC3HCA	2TXCC037BC3HCA 4TXCC037BC3HCA 2TXCC043BC3HCA 4TXCC043BC3HCA	2TXCB048BC3HCA 4TXCB048BC3HCA	4TXCC044BC3HCA 2TXCC049BC3HCA 4TXCC049BC3HCA	2TXCC060BC3HCA 4TXCC060BC3HCA
WEIGHT (LBS.)	34	38	45	48	49	51	65
REFRIGERANT CONTROL	TXV (NON-BLEED)						
HEIGHT "A" (IN.)	22-5/8	17-5/8	22-5/8	22-5/8	26-7/8	26-7/8	30-1/16
OVERALL WIDTH "B" (IN.)	14-1/2	17-1/2		21	17-1/2	21	
OPENING WIDTH "C" (IN.)	13-1/2	16-1/2		20	16-1/2	20	
TOP OPENING "D"	12-3/4	15-3/4		19-1/4	15-3/4	19-1/4	
GAS CONNECTION	3/4 BRAZE		7/8 BRAZE		1-1/8 BRAZE		
R410-A GAS REDUCER	5/8" X 3/4"	5/8" X 3/4" (025 ONLY)	3/4" X 7/8"		7/8" X 1-1/8"		
LIQUID CONNECTION	5/16 BRAZE		3/8 BRAZE				
MATCHED FURNACE WIDTH (NO ADAPTER REQUIRED)	14-1/2	17-1/2		21	17-1/2	21	
DRAIN PAN	PLASTIC						

From Dwg. D342803 Rev1

Outline Drawing for 2/4TXCD050BC3HCA, 2/4TXCD061BC3HCA, 2/4TXCD064BCHCA

(All dimensions are in inches)

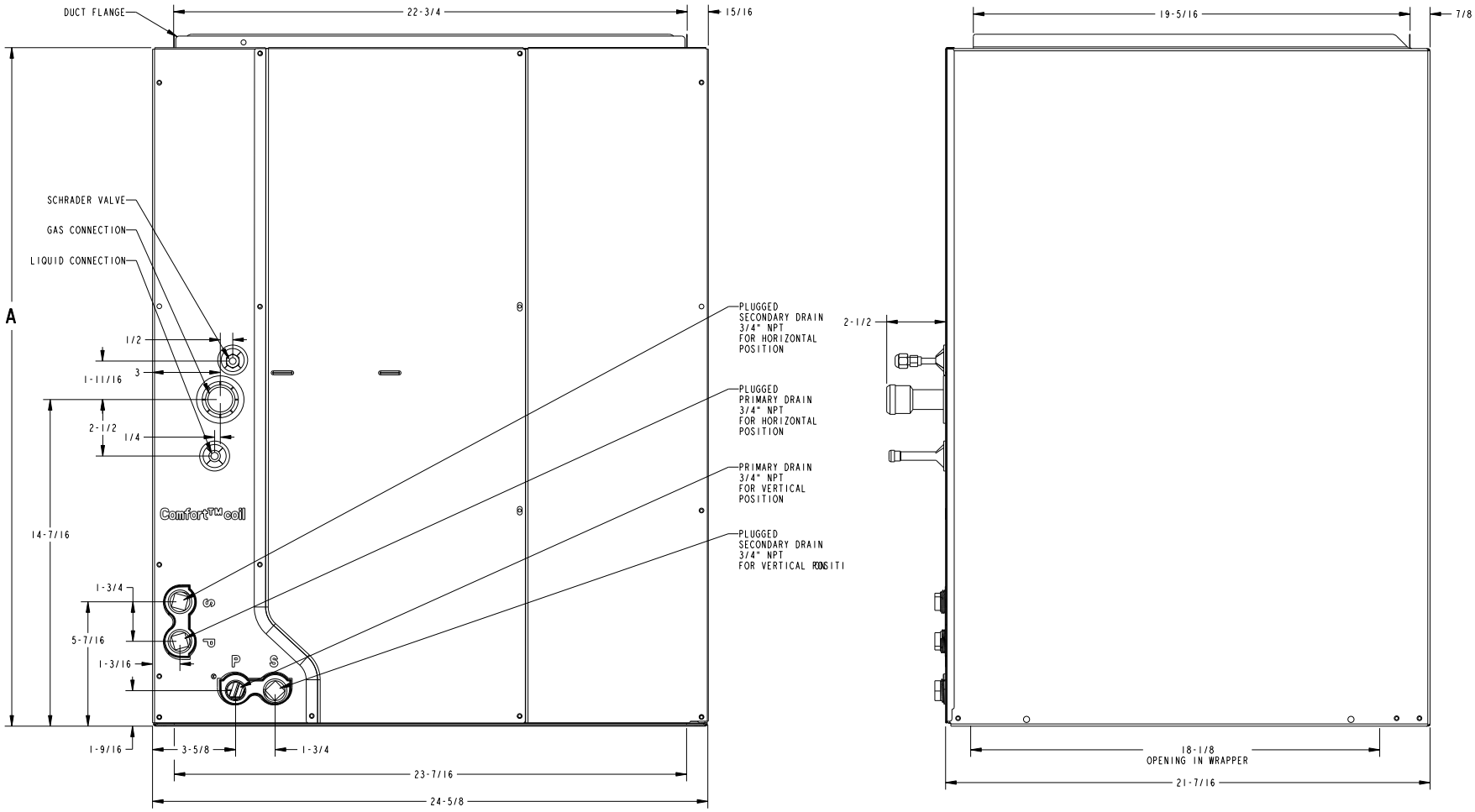

MODEL	2TXCD050BC3HCA 4TXCD050BC3HCA	2TXCD061BC3HCA 4TXCD061BC3HCA 2TXCD064BC3HCA 4TXCD064BC3HCA
WEIGHT (LBS.)	55	68
REFRIGERANT CONTROL	TXV (NON-BLEED)	
HEIGHT "A" (IN.)	26-7/8	30-1/16
GAS CONNECTION	1-1/8 BRAZE	
LIQUID CONNECTION	3/8 BRAZE	
MATCHED FURNACE WIDTH (NO ADAPTER REQUIRED)	24-1/2	
DRAIN PAN	PLASTIC	

From Dwg. D342804

Pub. No. 22-1813-03

Outline Drawing for 4TXCB003CC3HCA, 4TXCB004CC3HCA, 4TXCC006CC3HCA, 4TXCC007CC3HCA, and 4TXCC008CC3HCA

(All dimensions are in inches)

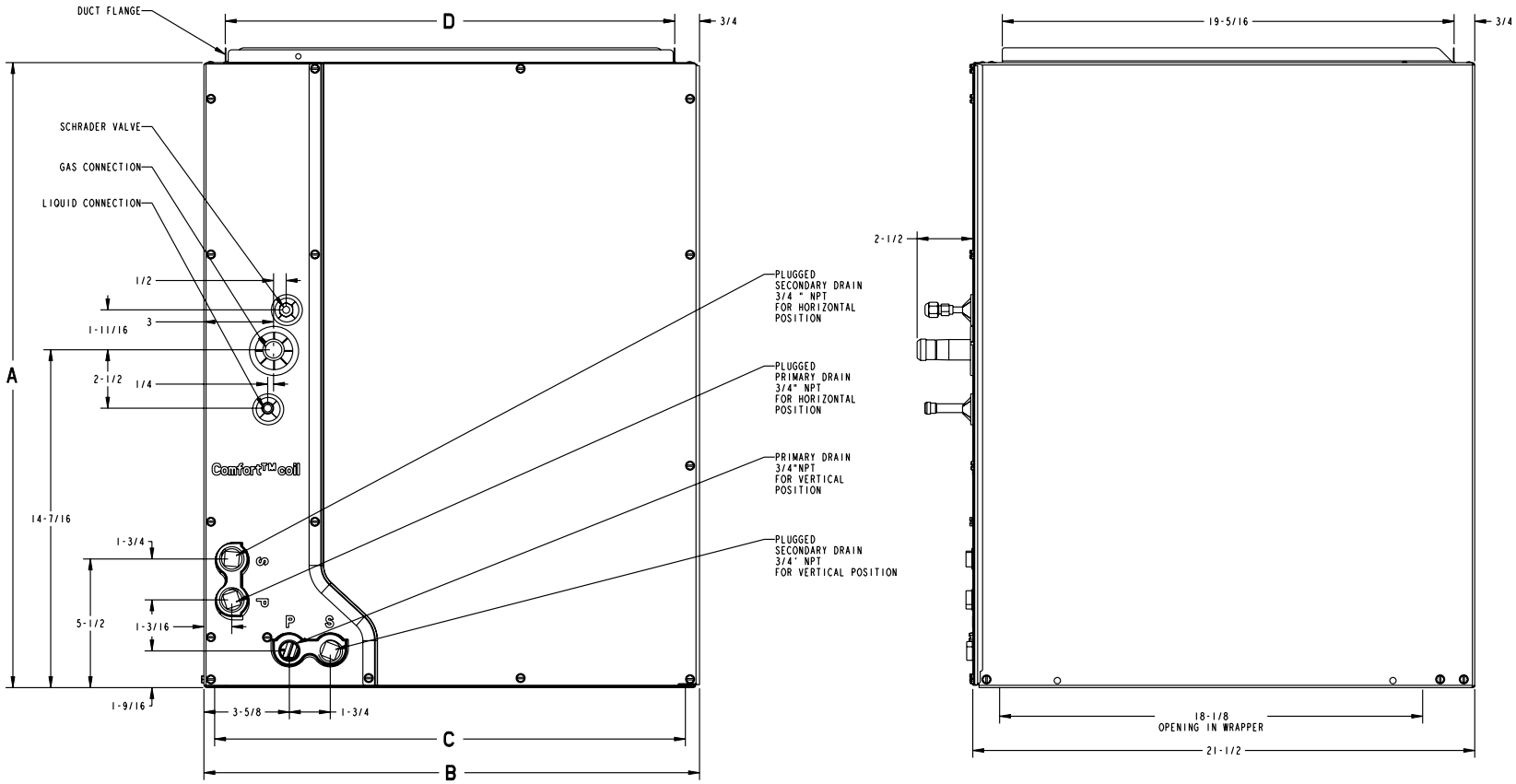

MODEL	4TXCB003CC3HCA	4TXCB004CC3HCA	4TXCC006CC3HCA	4TXCC007CC3HCA	4TXCC008CC3HCA
WEIGHT (LBS.)	45	49	48	51	65
REFRIGERANT CONTROL	TXV (NON-BLEED)				
HEIGHT "A" (IN.)	22-5/8	26-7/8	22-5/8	26-7/8	30-1/16
OVERALL WIDTH "B" (IN.)	17-1/2	17-1/2	21	21	
OPENING WIDTH "C" (IN.)	16-1/2	16-1/2	20	20	
TOP OPENING "D"	15-3/4	15-3/4	19-1/4	19-1/4	
GAS CONNECTION	5/8 BRAZE	3/4 BRAZE	5/8 BRAZE	3/4 BRAZE	
LIQUID CONNECTION	3/8 BRAZE				
MATCHED FURNACE WIDTH (NO ADAPTER REQUIRED)	17-1/2		21		
DRAIN PAN	PLASTIC				

From Dwg. D343414rev0

Outline Drawing for 4TXCD010CC3HCA

(All dimensions are in inches)

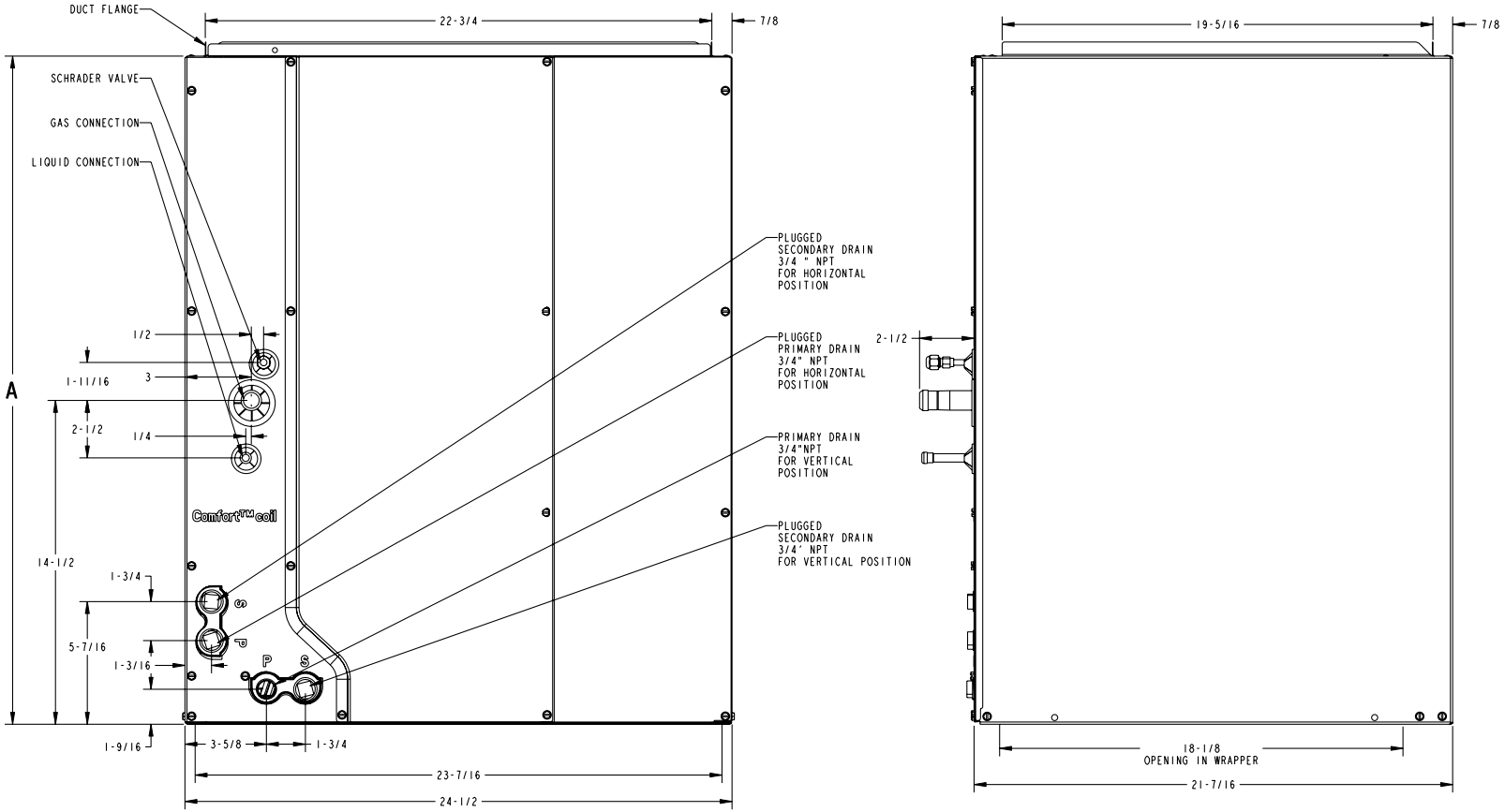

MODEL	4TXCD010CC3HCA
WEIGHT (LBS.)	68
REFRIGERANT CONTROL	TXV (NON-BLEED)
HEIGHT "A" (IN.)	30-1/16
GAS CONNECTION	3/4 BRAZE
LIQUID CONNECTION	3/8 BRAZE
MATCHED FURNACE WIDTH (NO ADAPTER REQUIRED)	24-1/2
DRAIN PAN	PLASTIC

From Dwg. D343415rev0

Trane Inc.
6200 Troup Highway
Tyler, TX 75707
www.trane.com

For more information contact your local dealer (distributor)

Literature Order Number	22-1813-03
File Number	22-1813-03
Supersedes	22-1813-02
Date	09/08

*Since **Trane** has a policy of continuous product improvement, **it** reserves the right to change design and specifications without notice.*